PSS 1-6H6 A en

Foxboro® Model 9700A Magnetic Flow Sensor

The 9700A magnetic flow sensor can be used with IMT30A, IMT31A and IMT33A magnetic flow converters.

- Robust, fully welded construction for industrial process applications
- For demanding applications including corrosive, abrasive and high pressure
- Engineered constructions for customer specific solutions

Life Is On

Foxboro®
by Schneider Electric

1.1 The all-round solution for process industries

The **9700A** design meets the demands of a very wide range of applications in industries including the chemical, pulp & paper, water and wastewater, minerals and mining, iron, steel and metals, pharmaceuticals and oil & gas industry.

The 9700A has a field proven and unsurpassed lifetime. This is assured by the fully welded construction, full bore pipe construction, absence of moving parts and wear resistant liner materials. Even for demanding applications in harsh environments or with aggressive and abrasive media the 9700A can offer a solution.

Examples include sub-sea installations, slurries with very high solids contents, alkaline solutions and acids, up to chemical dosing, bleaching, colouring, and black liquor in the paper industry..

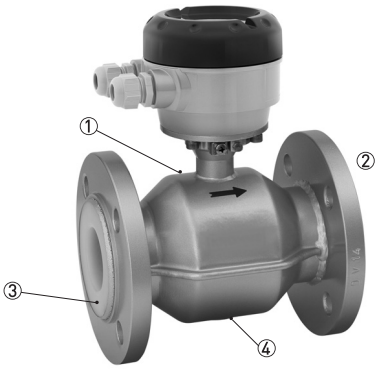

① Robust fully welded construction
② Diameter range: DN10...2000 - 3/8 ... 80"
③ PFA, PTFE, ETFE, PU, hard rubber and soft rubber liners
④ Hastelloy, titanium, tantalum, stainless steel, platinum and low noise electrodes

Highlights

- Trusted and accepted flow sensor for all process applications
- Proven in use and unsurpassed lifetime
- All welded rugged construction, to extend lifetime of equipment
- Good corrosion, erosion / abrasion resistance
- Wide choice of materials for electrodes including Hastelloy, Tantalum, Platinum
- Corrosion resistant and leak tight electrodes.
- Reliable measurement under very demanding conditions:
  including high temperatures up to 180°C / 356°F, high solids contents (up to 70%)
- Bi-directional flow metering
- Wide range of approvals for hazardous areas
- No grounding rings with virtual reference option on IMT33A
- Extensive diagnostic capabilities

Industries

- Chemicals
- Pulp & Paper
- Minerals & Mining
- Oil & gas
- Iron, Steel & Metals
- Water and wastewater
- Pharmaceuticals

Applications

- For clean liquids
- For slurries and pastes with high solids content
- For abrasive and aggressive products

1.2 Options

The solution for any industry

From standard to customized
For easy ordering the standard range of the 9700A covers all popular sizes, materials and coatings. Process connections are available in EN 1092-1 (up to PN40), ASME B16.5 and JIS (20K).

Easy installation
Fitting the 9700A is easy with the flanged design and standard ISO insertion lengths. To further ease the operation, the 9700A can be installed without filters and straighteners. Even grounding rings are not required with the patented **"Virtual Reference"** option on the IMT33A converter.

IP68
Installation in measurement chambers subject to (constant) flooding is possible with the IP68 rated version. .

1.3 Measuring principle

An electrically conductive fluid flows inside an electrically insulated pipe through a magnetic field. This magnetic field is generated by a current, flowing through a pair of field coils. Inside of the fluid, a voltage U is generated:

U = v * k * B * D

in which:
v = mean flow velocity
k = factor correcting for geometry
B = magnetic field strength
D = inner diameter of flowmeter

The signal voltage U is picked off by electrodes and is proportional to the mean flow velocity v and thus the flow rate Q. A signal converter is used to amplify the signal voltage, filter it and convert it into signals for totalizing, recording and output processing.

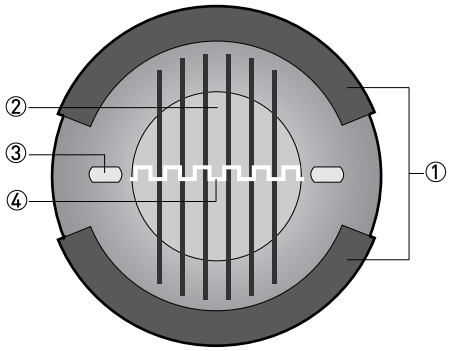

Figure 1-1: Measuring principle

① Field coils
② Magnetic field
③ Electrodes
④ Induced voltage (proportional to flow velocity)

2.1 Technical data

- *The following data is provided for general applications. If you require data that is more relevant to your specific application, please contact us or your local sales office.*
- *Additional information (certificates, special tools, software,...) and complete product documentation can be downloaded free of charge from the website.*

Measuring system

Measuring principle	Faraday's law
Application range	Electrically conductive fluids
Measured value	
Primary measured value	Flow velocity
Secondary measured value	Volume flow

Design

Features	Fully welded maintenance-free flow sensor.
	Flange version with full bore flow tube.
	Standard as well as higher pressure ratings.
	Broad range of nominal sizes.
	Industry specific insertion lengths.
Modular construction	The measurement system consists of a flow sensor and a signal converter. It is available as compact and as separate version.
Compact version	With signal converter IMT30A: 9700A + IMT30A 4
	With signal converter IMT31A: 9700A + IMT31A 4
	With signal converter IMT33A: 9700A + IMT33A 4
Remote version	In wall (W) mount version with signal converter IMT30A: 9700A + IMT30A N
	In wall (W) mount version with signal converter IMT31A: 9700A + IMT31A N
	In field (F) or wall (W) mount version with signal converter IMT33A: 9700A + IMT33A H or N
Nominal diameter	With signal converter IMT30A: DN10... 1200 / 3/8...48"
	With signal converter IMT31A: DN10... 1200 / 3/8...48"
	With signal converter IMT33A: DN10... 2000 / 3/8...80"

Measuring accuracy

Maximum measuring error	Depending on signal converter and DN size.
	IMT30A: down to 0.5% of the measured value ± 1 mm/s
	IMT31A: down to 0.3% of the measured value ± 1 mm/s
	IMT33A: down to 0.2% of the measured value ± 1 mm/s
	The additional typical measuring deviation for the current output is ±10 µA.
	The maximum measuring error depends on the installation conditions.
	For detailed information refer to *Measurement accuracy* on page 15.
Repeatability	± 0.1% of MV, minimum 1 mm/s
Calibration / Verification	**Standard:**
	2 point calibration by direct volume comparison.
	Optional:
	Verification to Measurement Instrument Directive (MID), Annex III (MI-001). Check BuyAutomation for availability
	(Only in combination with signal converter IMT33A)
Long term stability	± 0.1% of MV

Operating conditions

Temperature	
For Ex versions different temperatures are valid. Please check the relevant Ex documentation for details.	
Process temperature	PTFE / PFA: -40...+180°C / -40...+356°F for remote versions
	PTFE / PFA: -40...+140°C /-40...+284°F for IMT33A compact versions
	PTFE / PFA: -40...+120°C /-40...+248°F for IMT30A and IMT31A compact versions
	ETFE: -40...+120°C / -40...+248°F
	Hard rubber: -5...+80°C / 23...+176°F
	Soft rubber: -5...+60°C / 23...+140°F
	PU: -5...+65°C / 23...+149°F
	For more information about temperatures see the temperature table in the manual.
Ambient temperature	**Standard** (with aluminum signal converter housing):
	-40…+65°C / -40…+149°F
	Protect electronics against self-heating with ambient temperatures above +55°C / +131°F.
	Option (with stainless steel signal converter housing): Check BuyAutomation for availability.
	-40...+55°C / -40…+130°F
Storage temperature	-50…+70°C / -58…+158°F
Measuring range	-12...+12 m/s / -40...+40 ft/s
Pressure	
EN 1092-1	DN1200...2000: PN6
	DN200...1000: PN10
	DN65 and DN100...150: PN16
	DN10...50 and DN80: PN40
	Other pressures on request.
ASME B16.5	3/8...40": 150 lb RF
	Other pressures on request.
JIS	DN50...1000 / 2..40": 10 K
	DN10...40 / 3/8...1½" : 20 K
	Other pressures on request.
Vacuum load	For detailed information refer to *Vacuum load* on page 23.
Pressure loss	Negligible

Chemical properties	
Physical condition	Electrically conductive liquids
Electrical conductivity	Water: ≥ 20 µS/cm
	Standard: ≥ 1 µS/cm
Permissible gas content (volume)	IMT30A: ≤ 3%
	IMT31A: ≤ 5%
	IMT33A: ≤ 5%
Permissible solid content (volume)	IMT30A: ≤ 10%
	IMT31A: ≤ 10%
	IMT33A: ≤ 70%

Installation conditions

Installation	Assure that the flow sensor is always fully filled.
	For detailed information refer to *Installation* on page 24.
Flow direction	Forward and reverse.
	Arrow on flow sensor indicates positive flow direction.
Inlet run	≥ 5 DN
Outlet run	≥ 2 DN
Dimensions and weights	For detailed information refer to *Dimensions and weights* on page 16.

Materials

Flow sensor housing	DN10...15 / 3/8...½": stainless steel 1.4408
	DN20 / ¾": GTW-S 30
	DN25...2000 / 1...80": sheet steel
Measuring tube	Austenitic stainless steel
Flanges	Standard: carbon steel
Liner	**Standard**
	DN10...15 / 3/8...½": PFA
	DN20 ¾": PTFE
	DN25...150 / 1...6": PFA
	DN200...1800 / 8...72": ETFE
	Option
	DN25...600 / 1...24": PTFE
	DN200...1800 / 8...72": PU
	DN200...2000 / 8...80": Hard rubber (Ex only)
	DN50...600 / 2...24": Soft rubber
Protective coating	On exterior of the meter: flanges, housing, signal converter (compact version) and / or connection box (field version)
	Standard coating
Connection box	Only for remote versions
	Standard: die-cast aluminum
	Option: stainless steel
Measuring electrodes	Standard: Hastelloy® C
	Option: platinum, stainless steel, titanium, tantalum, low noise
	Option: conductive rubber (only in combination with soft rubber liner)
Grounding rings	**Standard :** stainless steel
	Option: Hastelloy® C, titanium, tantalum
	Grounding rings can be omitted with virtual reference option for the signal converter IMT33A.
Reference electrode (optional)	Standard: Hastelloy® C
	Option: platinum, stainless steel, titanium, tantalum, low noise

Process connections

Flange	
EN 1092-1	DN10...2000 in PN6...40
ASME	3/8...80" in 150...300 lb RF
JIS	DN10...1000 in JIS 10...20 K
Design of gasket surface	EN 1092-1, ASME, JIS; RF

Electrical connections

For full detail refer to the relevant documentation of the signal converter.	
Signal cable (remote versions only)	
Type A (DS)	**In combination with the signal converter IMT30A, IMT31A and IMT33A**
	Standard cable, double shielded. Max. length: 600 m / 1968 ft (dep. on electrical conductivity and flow sensor).
Type B (BTS)	**Only in combination with the signal converter IMT33A**
	Optional cable, triple shielded. Max. length: 600 m / 1968 ft (dep. on electrical conductivity and flow sensor).
I/O	For full details of I/O options, including data streams and protocols, see technical datasheet of the relevant signal converter.

Approvals and certificates

CE	
This device fulfils the statutory requirements of the EU directives. The manufacturer certifies successful testing of the product by applying the CE mark.	
	For full information of the EU directive & standards and the approved certifications; please refer to the CE declaration or the website of the manufacturer.
Hazardous areas	
ATEX	Please check the relevant Ex documentation for details.
	Compact version with signal converter IMT30A 4 : II 2 GD
	Compact version with signal converter IMT31A 4: II 2 GD
	Compact version with signal converter IMT33A 4: II 2 GD or II 2(1) GD
	Remote version: II 2 GD
FM	**In combination with signal converter IMT33A 4:**
	Class I, Div 2, groups A, B, C and D
	Class II, Div 2, groups F and G
	Class III, Div 2, groups F and G
CSA	**In combination with signal converter IMT33A:**
	Class I, Div 2, groups A, B, C and D
	Class II, Div 2, groups F and G
IECEx	Compact version with signal converter
	IIC T4
	Compact version with signal converter
	IIC T6...T3
NEPSI	Ex me ia IIC T6...T3
	Ex de ia IIC T6...T3
	Ex qe ia IIC T6...T3
	Ex e ia IIC T6...T3

Other approvals and standards	
Hygiene	PFA liner is FDA compliant.
Protection category acc. to IEC 60529 / EN 60529	**Standard:**
	IP66/67 (NEMA 4/4X/6)
	Option:
	IP68 (NEMA 6P)
	IP68 is only available for separate design and with a stainless steel connection box.
Protective coating	Standard; ISO 12944-2: C3 medium / C4 high
Vibration resistance	IEC 68-2-64
Random vibration test	IEC 68-2-34
Shock test	IEC 68-2-27

2.2 Measurement accuracy

Every electromagnetic flowmeter is calibrated by direct volume comparison. The wet calibration validates the performance of the flowmeter under reference conditions against accuracy limits.

The accuracy limits of electromagnetic flowmeters are typically the result of the combined effect of linearity, zero point stability and calibration uncertainty.

Reference conditions

- Medium: water
- Temperature: +5...35°C / +41...95°F
- Operating pressure: 0.1...5 barg / 1.5...72.5 psig
- Inlet section: ≥ 5 DN
- Outlet section: ≥ 2 DN

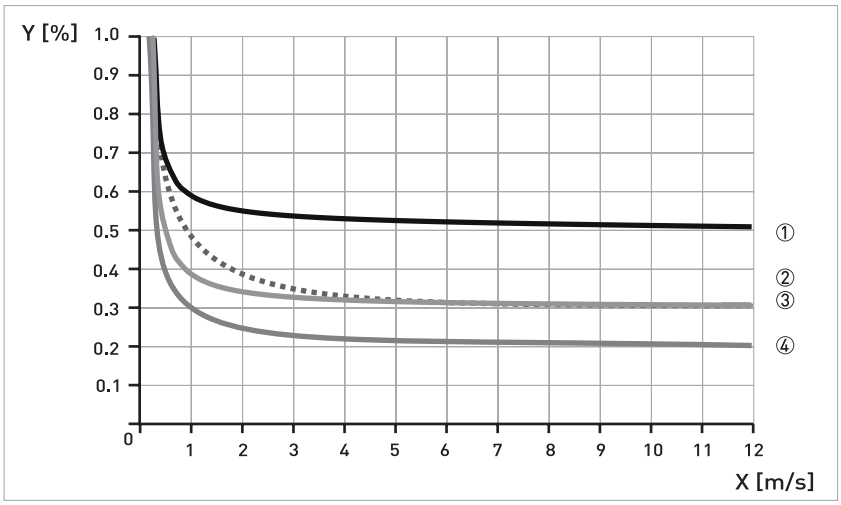

Figure 2-1: Flow velocity vs. accuracy
X [m/s] : flow velocity
Y [%]: deviation from the actual measured value (mv)

Accuracy

Flow sensor diameter	Signal converter type	Accuracy	Curve
DN10...1600 / $^{3}/_{8}$...64"	IMT33A	±0.2% of mv + 1 mm/s	④
DN1800...2000 / > 64"	IMT33A	±0.3% of mv + 2 mm/s	③
DN10...1200 / $^{3}/_{8}$...48"	IMT31A	±0.3% of mv + 1 mm/s	②
DN10...1200 / $^{1}/_{10}$...48"	IMT30A	±0.5% of mv + 1 mm/s	①

2.3 Dimensions and weights

Remote version	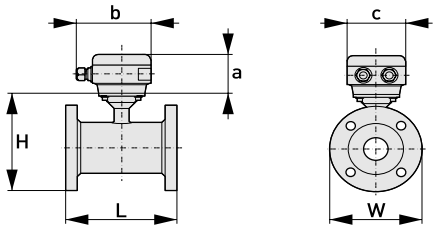	a = 88 mm / 3.5" b = 139 mm / 5.5" ① c = 106 mm / 4.2" Total height = H + a
Compact version with : **IMT33A**	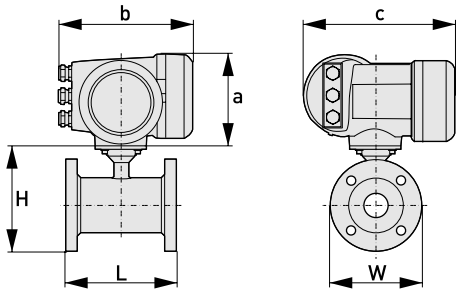	a = 155 mm / 6.1" b = 230 mm / 9.1" ① c = 260 mm / 10.2" Total height = H + a
Compact version with : **IMT31A (0°)**	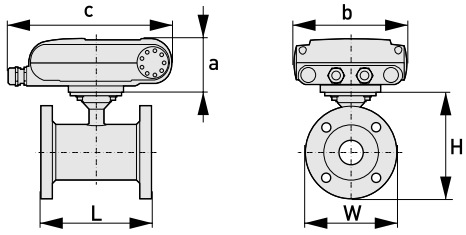	a = 82 mm / 3.2" b = 161 mm / 6.3" c = 257 mm / 10.1" ① Total height = H + a
Compact version with : **IMT31A (45°)**	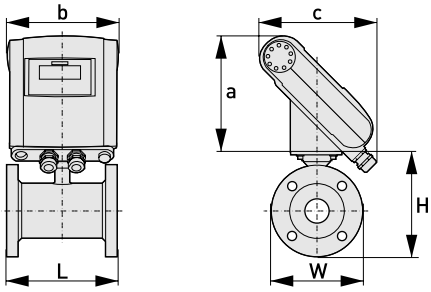	a = 186 mm / 7.3" b = 161 mm / 6.3" c = 184 mm / 2.7" ① Total height = H + a

Compact version with stainless steel IMT31A (10°)	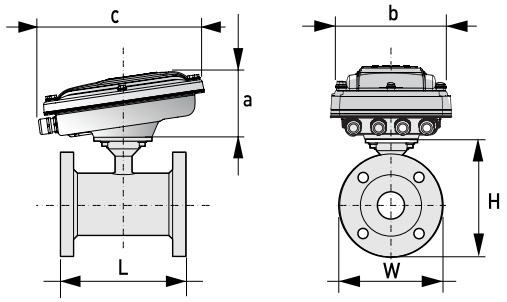	a = 100 mm / 4" b = 187 mm / 7.36" ① c = 270 mm / 10.63" Total height = H + a
Compact version with : IMT30A (10°)	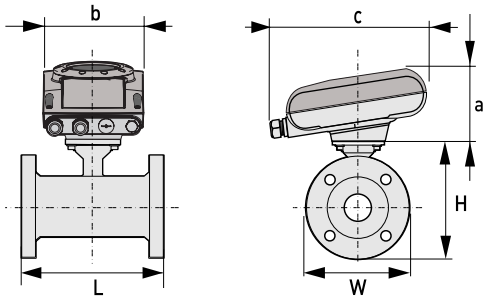	a = 100mm / 4" b = 157 mm / 6.18" ① c = 260 mm / 10.24" Total height = H + a

① The value may vary depending on the used cable glands.

- *All data given in the following tables are based on standard versions of the flow sensor only.*
- *Especially for smaller nominal sizes of the flow sensor, the signal converter can be bigger than the flow sensor.*
- *Note that for other pressure ratings than mentioned, the dimensions may be different.*
- *For full information on signal converter dimensions see relevant documentation.*

EN 1092-1

Nominal size		Dimensions [mm]				Approximately weight [kg]
DN	PN [bar]	L		H	W	
		DIN	ISO 13359			
10	40	150	-	106	90	6
15	40	150	200	106	95	6
20	40	150	200	158	105	7
25	40	150	200	140	115	4
32	40	150	200	157	140	5
40	40	150	200	166	150	5
50	40	200	200	186	165	9
65	16	200	200	200	185	9
80	40	200	200	209	200	12
100	16	250	250	237	220	15
125	16	250	250	266	250	19
150	16	300	300	300	285	27
200	10	350	350	361	340	34
250	10	400	450	408	395	48
300	10	500	500	458	445	58
350	10	500	550	510	505	78
400	10	600	600	568	565	101
450	10	600	-	618	615	111
500	10	600	-	671	670	130
600	10	600	-	781	780	165
700	10	700	-	898	895	248
800	10	800	-	1012	1015	331
900	10	900	-	1114	1115	430
1000	10	1000	-	1225	1230	507
1200	6	1200	-	1417	1405	555
1400	6	1400	-	1619	1630	765
1600	6	1600	-	1819	1830	1035
1800	6	1800	-	2027	2045	1470
2000	6	2000	-	2259	2265	1860

150 lb flanges

Nominal size		Dimensions [inch]				Approximately weight [lb]
ASME	PN [psi]	L		H	W	
		DIN	ISO 13359			
3/8"	284	5.91	-	5.08	3.50	12
½"	284	5.91	7.87	5.08	3.50	12
¾"	284	5.91	7.87	5.28	3.88	18
1"	284	5.91	7.87	5.39	4.25	7
1 ¼"	284	5.91	7.87	5.98	4.62	7
1 ½"	284	5.91	7.87	6.10	5.00	11
2"	284	7.87	7.87	7.05	5.98	18
2 ½"	284	7.87	7.87	7.72	7.00	24
3"	284	7.87	7.87	8.03	7.50	26
4"	284	9.84	9.84	9.49	9.00	40
5"	284	9.84	9.84	10.55	10.0	49
6"	284	11.81	11.81	11.69	11.0	64
8"	284	13.78	13.78	14.25	13.5	95
10"	284	15.75	17.71	16.3	16.0	143
12"	284	19.69	19.69	18.78	19.0	207
14"	284	27.56	21.65	20.67	21.0	284
16"	284	31.50	23.62	22.95	23.5	364
18"	284	31.50	-	24.72	25.0	410
20"	284	31.50	-	26.97	27.5	492
24"	284	31.50	-	31.38	32.0	675

- *Pressures at 20° C / 68° F.*
- *For higher temperatures, the pressure and temperature ratings are as per ASME B16.5.*

300 lb flanges

Nominal size		Dimensions [inch]				Approximately weight [lb]
ASME	PN [psi]	L		H	W	
		DIN	ISO 13359			
3/8"	741	5.91	-	5.24	3.75	15
½"	741	5.91	7.87	5.24	3.75	15
¾"	741	5.91	7.87	5.67	4.62	20
1"	741	5.91	7.87	5.71	4.87	11
1 ½"	741	7.87	7.87	6.65	6.13	13
2"	741	9.84	7.87	7.32	6.50	22
3"	741	9.84	7.87	8.43	8.25	31
4"	741	11.81	9.84	10.00	10.0	44
6"	741	12.60	11.81	12.44	12.5	73
8"	741	15.75	13.78	15.04	15.0	157
10"	741	19.69	17.71	17.05	17.5	247
12"	741	23.62	-	20.00	20.5	375
14"	741	27.56	-	21.65	23.0	474
16"	741	31.50	-	23.98	25.5	639
20"	741	31.50	-	28.46	30.5	937
24"	741	31.50	-	33.39	36.0	1345

- *Pressures at 20° C / 68° F.*
- *For higher temperatures, the pressure and temperature ratings are as per ASME B16.5.*

2.4 Pressure derating

The graphs below refer to the maximum pressure as a function of the temperature for the flanges of the flowmeter (per specified flange material).

Please note that the specified values only refer to the flanges. The maximum value for the flowmeter can further be limited by the maximum value for other materials (i.e. the liner)

For A = Carbon steel A 105 & B = Stainless steel 316L
X/Y axes in all graphs; X = Temperature in [°C] / Y = Pressure in [bar]
x/y axes in all graphs; x = Temperature in [°F] / y = Pressure in [psi]

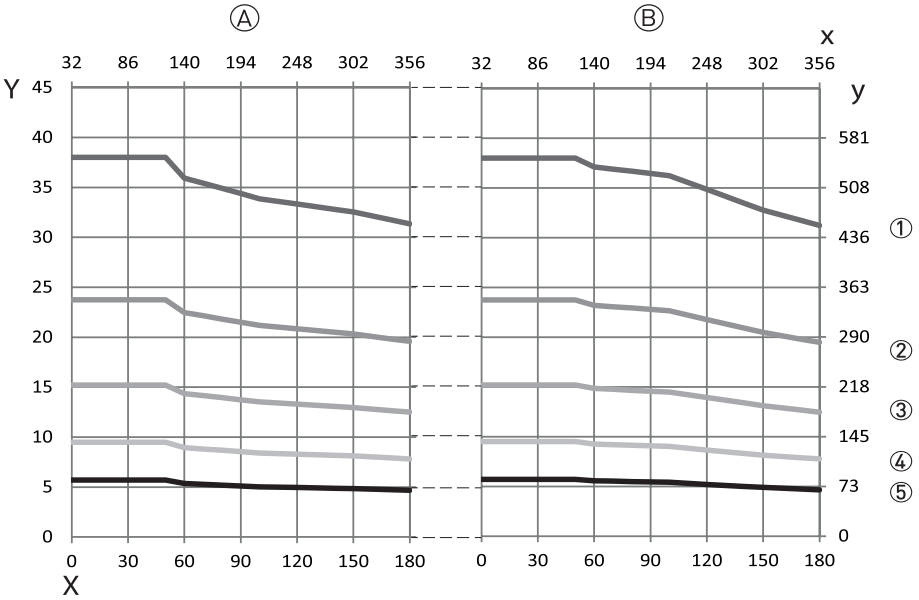

Figure 2-2: Pressure derating; EN 1092-1

① PN 40
② PN 25
③ PN 16
④ PN 10
⑤ PN 6

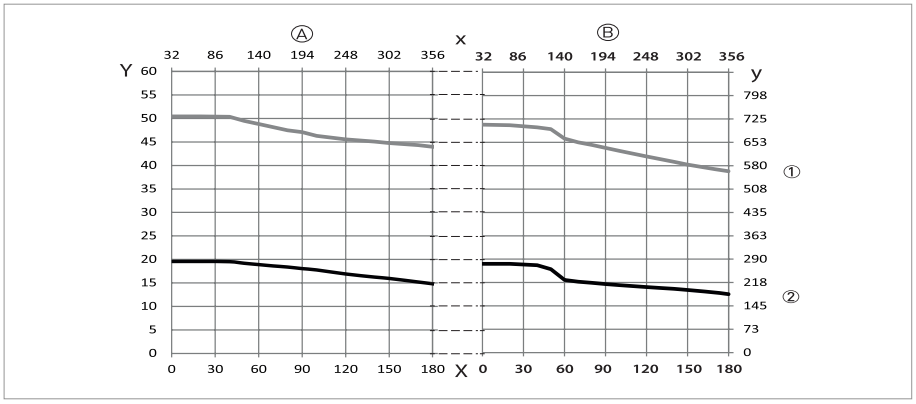

Figure 2-3: Pressure derating; ANSI B16.5

① 300 lbs
② 150 lbs

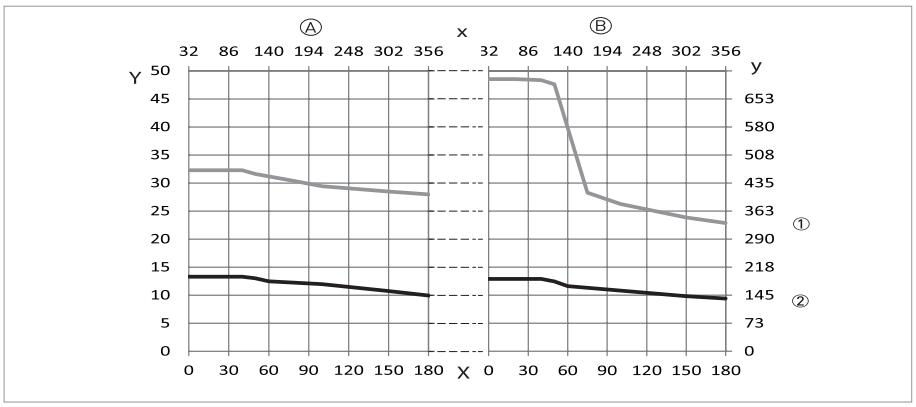

Figure 2-4: Pressure derating; JIS B2220

① 20K
② 10K

2.5 Vacuum load

Diameter	Max. pressure	Vacuum load in mbar abs. at a process temperature of								
[mm]	[bar]	40°C	60°C	70°C	80°C	90°C	100°C	120°C	140°C	180°C
Liner in PTFE										
DN10...20	50	0	0	0	0	0	0	500	750	1000
DN200...300	50	500	750	1000	1000	1000	1000	1000	1000	1000
DN350...600	50	800	1000	1000	1000	1000	1000	1000	1000	1000
Liner in PFA										
DN25...150	50	0	0	0	0	0	0	0	0	0
Liner in ETFE										
DN200...2000	150	100	100	100	100	100	100	100	-	-
Liner in Hard rubber										
DN200...300	150	250	400	400	400	-	-	-	-	
DN350...2000	150	500	600	600	600	-	-	-	-	-
Liner in PU										
DN200...1800	1500	500	600	-	-	-	-	-	-	-
Liner in Soft rubber										
DN50..600	40	1000	1000	-	-	-	-	-	-	-

Diameter	Max. pressure	Vacuum load in psia at a process temperature of								
[inch]	[psi]	104°F	140°F	158°F	176°F	194°F	212°F	248°F	284°F	356°F
Liner in PTFE										
3/8...3/4"	725	0	0	0	0	0	0	7.3	10.9	14.5
8...12"	725	7.3	10.9	14.5	14.5	14.5	14.5	14.5	14.5	14.5
14...24"	725	11.6	14.5	14.5	14.5	14.5	14.5	14.5	14.5	14.5
Liner in PFA										
1...6"	725	0	0	0	0	0	0	0	0	0
Liner in ETFE										
8...72"	2176	1.5	1.5	1.5	1.5	1.5	1.5	1.5	-	-
Liner in Hard rubber										
8...12"	2176	3.6	5.8	5.8	5.8	-	-	-	-	
14...80"	2176	7.3	8.7	8.7	8.7	-	-	-	-	-
Liner in PU										
8...72"	21756	7.3	8.7	-	-	-	-	-	-	-
Liner in Soft rubber										
2..24"	580	14.5	14.5	-	-	-	-	-	-	-

3.1 Intended use

Responsibility for the use of the measuring devices with regard to suitability, intended use and corrosion resistance of the used materials against the measured fluid lies solely with the operator.

The manufacturer is not liable for any damage resulting from improper use or use for other than the intended purpose.

The 9700A electromagnetic flowmeter is designed exclusively to measure the flow of electrically conductive, liquid media.

3.2 General notes on installation

Inspect the packaging carefully for damages or signs of rough handling. Report damage to the carrier and to the local office of the manufacturer.

Do a check of the packing list to make sure that you have all the elements given in the order.

Look at the device nameplate to ensure that the device is delivered according to your order. Check for the correct supply voltage printed on the nameplate.

3.2.1 Vibration

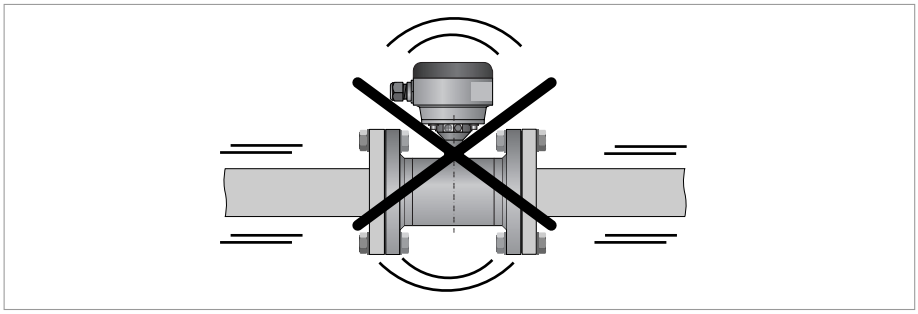

Figure 3-1: Avoid vibrations

3.2.2 Magnetic field

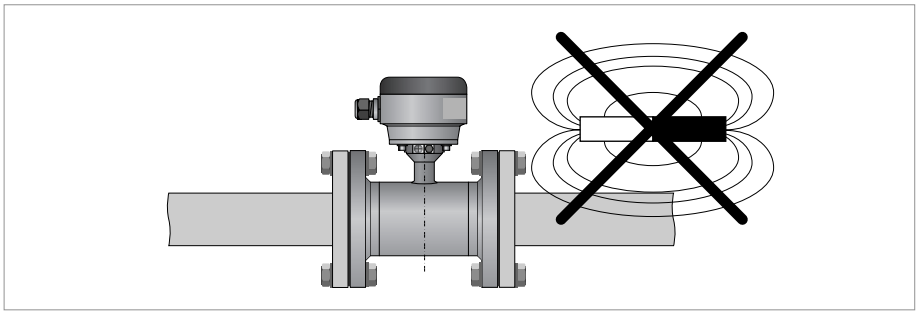

Figure 3-2: Avoid magnetic fields

3.3 Installation conditions

3.3.1 Inlet and outlet

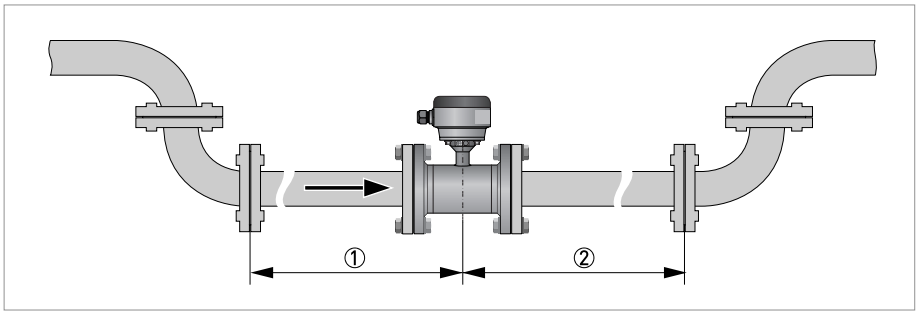

Figure 3-3: Recommended inlet and outlet

① Refer to chapter "Bends in 2 or 3 dimensions"
② ≥ 2 DN

3.3.2 Bends in 2 or 3 dimensions

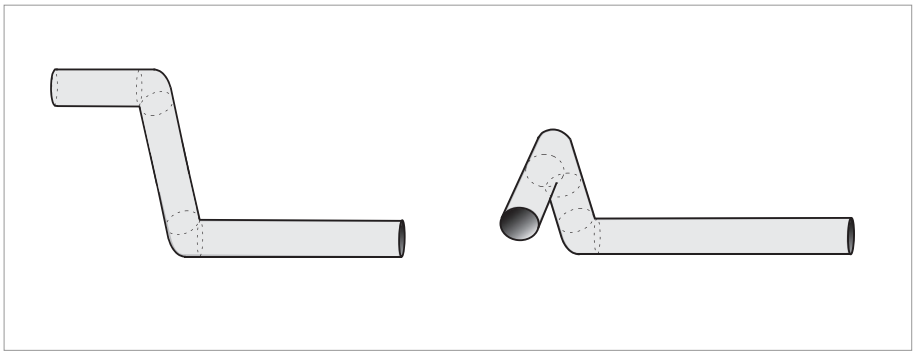

Figure 3-4: Inlet when using 2 and/or 3 dimensional bends upstream of the flowmeter

Inlet length: using bends in 2 dimensions: ≥ 5 DN; when having bends in 3 dimensions: ≥ 10 DN

*2 Dimensional bends occur in a vertical plane only, while 3 Dimensional bends occur in both vertical **and** horizontal plane.*

3.3.3 T-section

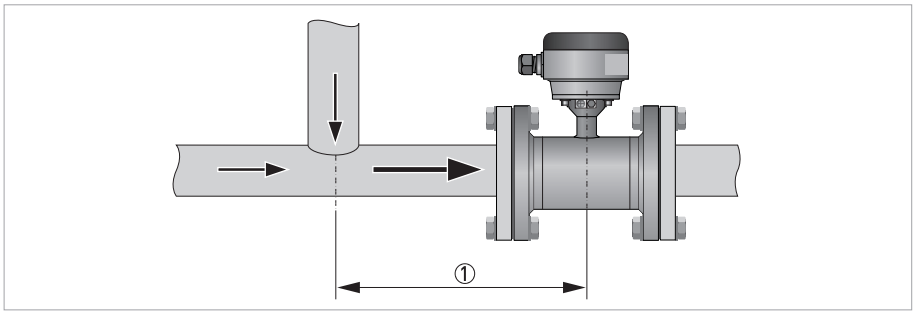

Figure 3-5: Distance behind a T-section

① ≥ 10 DN

3.3.4 Bends

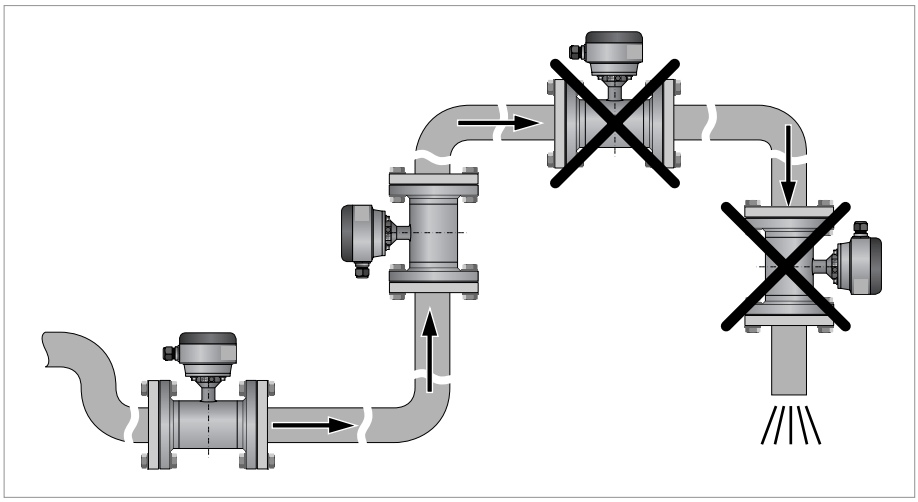

Figure 3-6: Installation in bending pipes

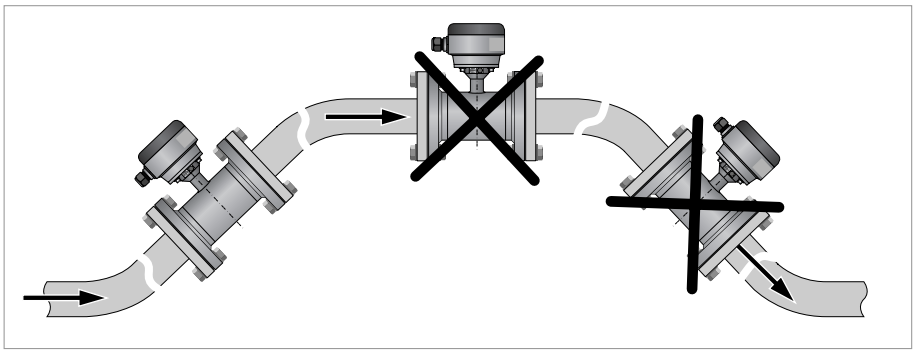

Figure 3-7: Installation in bending pipes

Avoid draining or partial filling of the flow sensor

3.3.5 Open feed or discharge

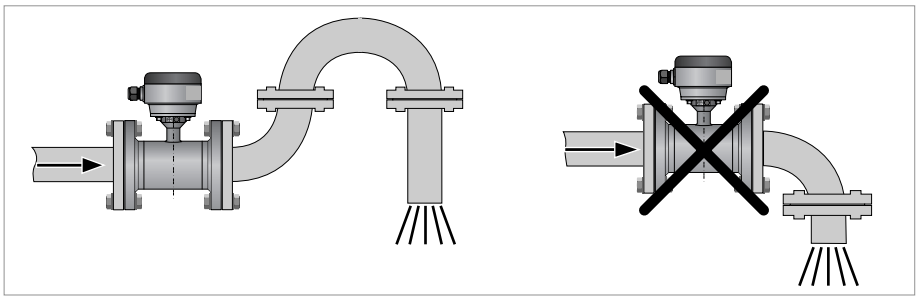

Figure 3-8: Installation in front of an open discharge

3.3.6 Flange deviation

Max. permissible deviation of pipe flange faces:
L_{max} - L_{min} ≤ 0.5 mm / 0.02"

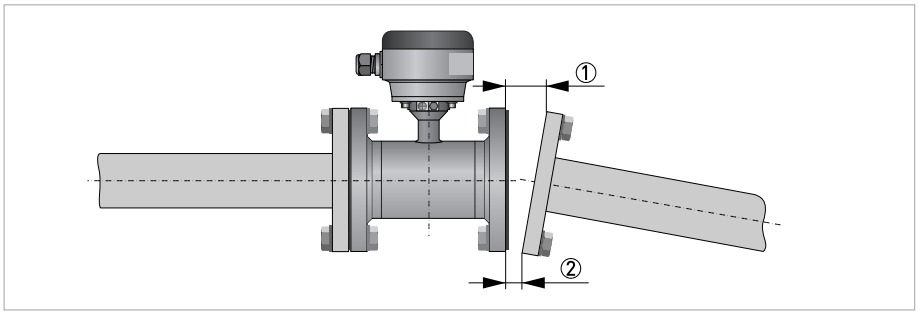

Figure 3-9: Flange deviation

① L_{max}
② L_{min}

3.3.7 Pump

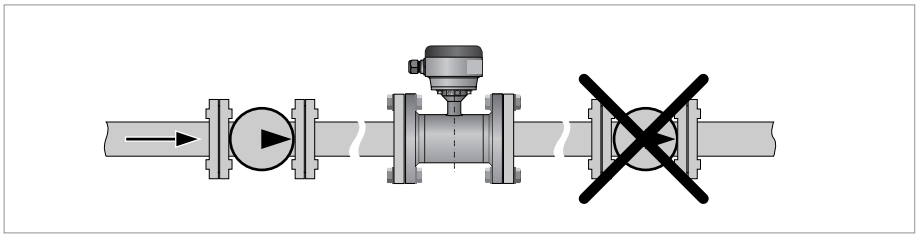

Figure 3-10: Installation behind a pump

3.3.8 Control valve

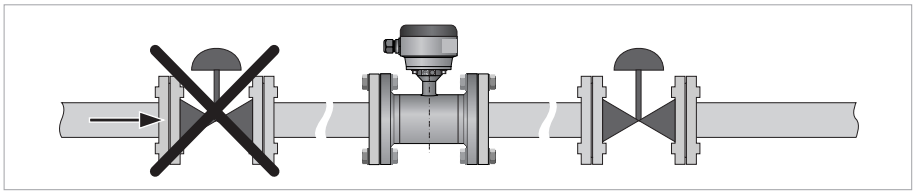

Figure 3-11: Installation in front of a control valve

3.3.9 Air venting and vacuum forces

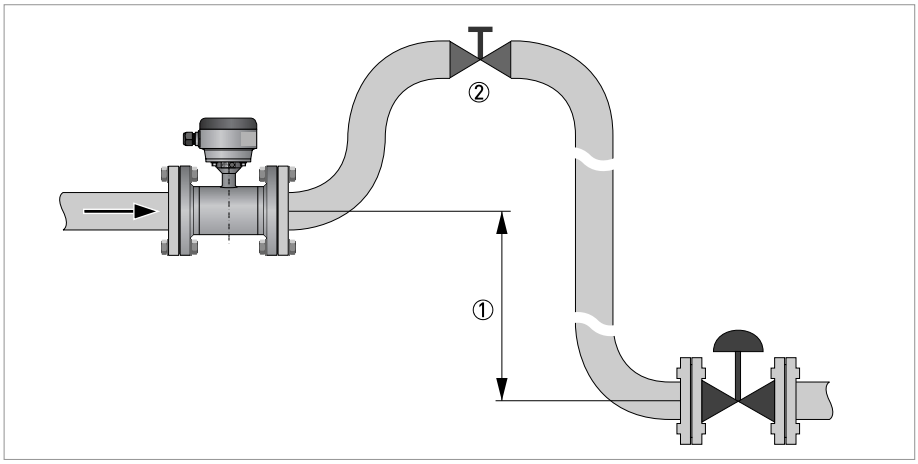

Figure 3-12: Air venting

① ≥ 5 m / 17 ft
② Air ventilation point

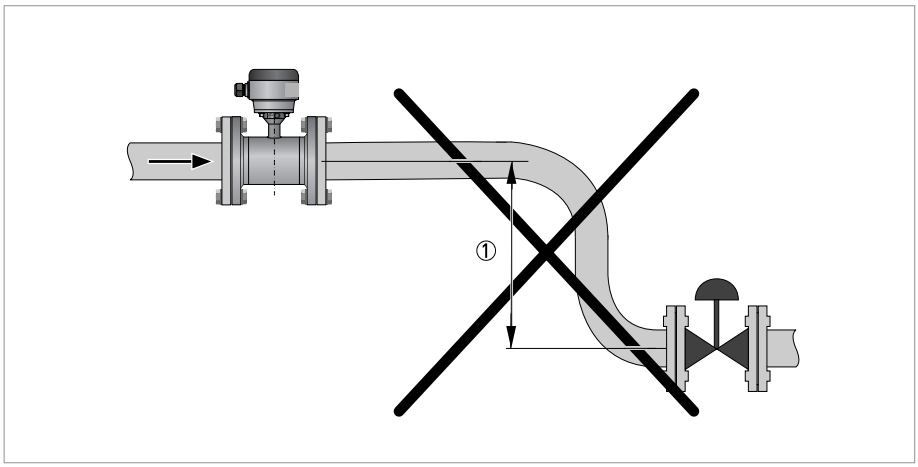

Figure 3-13: Vacuum

① ≥ 5 m / 17 ft

3.3.10 Mounting position

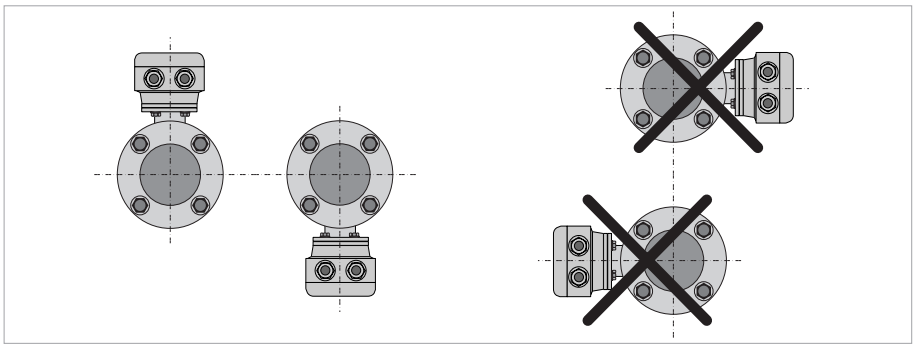

Figure 3-14: Mounting position

- Mount flow sensor either with signal converter aligned upwards or downwards.
- Install flow sensor in line with the pipe axis.
- Pipe flange faces must be parallel to each other.

3.4 Mounting

Please take care to use the proper gasket to prevent damaging the liner of the flowmeter. In general, the use of spiral wound gaskets is not advised, as it could severely damage the liner of the flowmeter.

3.4.1 Torques and pressures

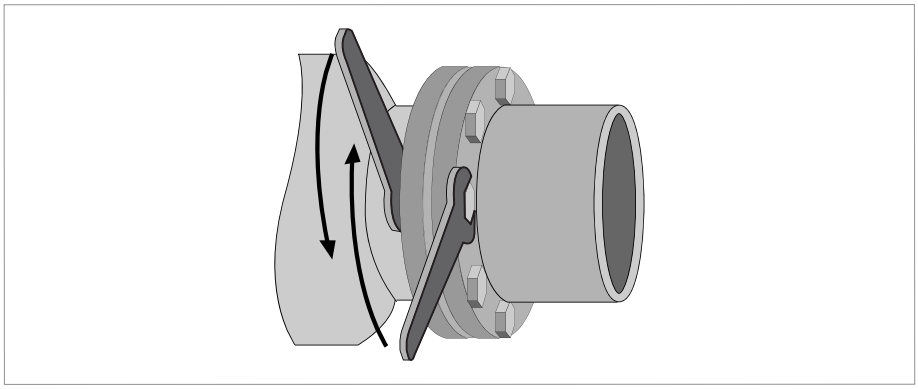

Figure 3-15: Tightening of bolts

Tightening of bolts

- Always tighten the bolts uniformly and in diagonally opposite sequence.
- Do not exceed the maximum torque value.
- Step 1: Apply approx. 50% of max. torque given in table.
- Step 2: Apply approx. 80% of max. torque given in table.
- Step 3: Apply 100% of max. torque given in table.

Other sizes / pressure ratings on request.

Nominal size DN [mm]	Pressure rating	Bolts ②	Max. torque [Nm] ①					
			PFA	PTFE	ETFE	PU	Hard rubber	Soft rubber
10	PN 40	4 x M 12	7.6	7.6	-	4.6	-	-
15	PN 40	4 x M 12	9.3	9.3	-	5.7	-	-
20	PN 40	4 x M 12	16	16	-	9.6	-	-
25	PN 40	4 x M 12	22	22	22	11	-	-
32	PN 40	4 x M 16	37	37	37	19	-	-
40	PN 40	4 x M 16	43	43	43	25	-	-
50	PN 40	4 x M 16	55	55	55	31	-	36
65	PN 16	4 x M 16	51	51	51	42	-	18
65	PN 40	8 x M 16	38	38	38	21	-	-
80	PN 40	8 x M 16	47	47	47	25	-	33
100	PN 16	8 x M 16	39	39	39	30	-	30
125	PN 16	8 x M 16	53	53	53	40	-	43
150	PN 16	8 x M 20	68	68	68	47	-	68
200	PN 10	8 x M 20	84	84	84	68	68	50
200	PN 16	12 x M 20	68	68	68	45	45	-
250	PN 10	12 x M 20	78	78	78	65	65	48
250	PN 16	12 x M 24	116	116	116	78	78	-
300	PN 10	12 x M 20	88	88	88	76	76	59
300	PN 16	12 x M 24	144	144	144	105	105	-
350	PN 10	16 x M 20	97	97	97	75	75	67
400	PN 10	16 x M 24	139	139	139	104	104	97
450	PN 10	20 x M 24	-	127	127	93	93	89
500	PN 10	20 x M 24	-	149	149	107	107	103
600	PN 10	20 x M 27	-	205	205	138	138	144
700	PN 10	20 x M 27	-	238	238	163	163	-
800	PN 10	24 x M 30	-	328	328	219	219	-
900	PN 10	28 x M 30	-	308	308	205	205	-
1000	PN 10	28 x M 35	-	392	392	261	261	-
③ *								

① The specified torque values are dependent on variables (temperature, bolt material, gasket material, lubricants, etc.) which are not within the control of the manufacturer. Therefore the values should be regarded as indicative only.

② F= ASTM gr B7 Studbolts - F=0.14 - Carbon steel flanges

③ * Information DN > 1000; please contact the support service department

Nominal size [inch]	Flange class [lb]	Bolts ②	Max. torque [in-lb] ①					
			PFA	PTFE	ETFE	PU	Hard rubber	Soft rubber
3/8	150	4 x 1/2"	39	39	-	-	-	-
1/2	150	4 x 1/2"	34	34	-	-	-	-
3/4	150	4 x 1/2"	50	50	-	-	-	-
1	150	4 x 1/2"	67	67	67	-	-	-
1 1/4	150	4 x 1/2"	97	97	97	-	-	-
1 1/2	150	4 x 1/2"	138	138	138	-	-	-
2	150	4 x 5/8"	225	225	225	-	-	158
3	150	4 x 5/8"	380	380	380	-	-	283
4	150	8 x 5/8"	300	300	300	-	-	207
6	150	8 x 3/4"	540	540	540	-	-	328
8	150	8 x 3/4"	979	979	979	818	818	418
10	150	12 x 7/8"	1104	1104	1104	923	923	601
12	150	12 x 7/8"	1478	1478	1478	1237	1237	676
14	150	12 x 1"	1835	1835	1835	1538	1538	909
16	150	16 x 1"	1767	1767	1767	1481	1481	1141
18	150	16 x 1 1/8"	-	2605	2605	2183	2183	1100
20	150	20 x 1 1/8"	-	2365	2365	1984	1984	1618
24	150	20 x 1 1/4"	-	3419	3419	2873	2873	1479
28	150	28 x 1 1/4"	-	2904	2904	-	③ *	2155
32	150	28 x 1 1/2"	-	4560	4560	-	*	-
36	150	32 x 1 1/2"	-	-	③ *	-	*	-
40	150	36 x 1 1/2"	-	-	*	-	*	-

① The specified torque values are dependent on variables (temperature, bolt material, gasket material, lubricants, etc.) which are not within the control of the manufacturer. Therefore the values should be regarded as indicative only.
② F= ASTM gr B7 Studbolts - F=0.14 - Carbon steel flanges
③ Information * ; please contact the support service department

Other sizes / pressure ratings on request.

- *Pressures are applicable at 20°C / 68°F.*
- *For higher temperatures, the pressure ratings are as per ASME B16.5.*

4.1 Safety instructions

All work on the electrical connections may only be carried out with the power disconnected. Take note of the voltage data on the nameplate!

Observe the national regulations for electrical installations!

Observe without fail the local occupational health and safety regulations. Any work done on the electrical components of the measuring device may only be carried out by properly trained specialists.

Look at the device nameplate to ensure that the device is delivered according to your order. Check for the correct supply voltage printed on the nameplate.

4.2 Grounding

The device must be grounded in accordance with regulations in order to protect personnel against electric shocks.

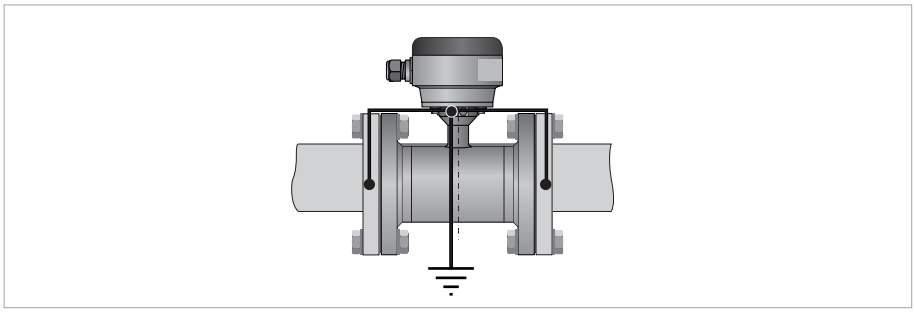

Figure 4-1: Grounding

① Metal pipelines, not internally coated. Grounding without grounding rings.

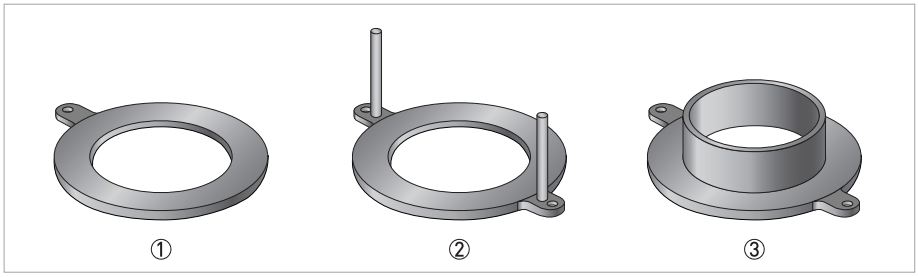

Figure 4-2: Different types of grounding rings

① Grounding ring number 1
② Grounding ring number 2
③ Grounding ring number 3

Grounding ring number 1:

- Thickness : 3 mm / 0.1" (tantalum: 0.5 mm / 0.02")

Grounding ring number 2:

- Thickness : 3 mm / 0.1"
- Prevents damage to the flanges during transport and installation
- Especially for flow sensors with PTFE liner

Grounding ring number 3:

- Thickness : 3 mm / 0.1"
- With cylindrical neck (length 30 mm / 1.25" for DN10...150 / 3/8...6")
- Offers liner protection against abrasive fluids

4.3 Virtual reference for IMT33A (4, N and H version)

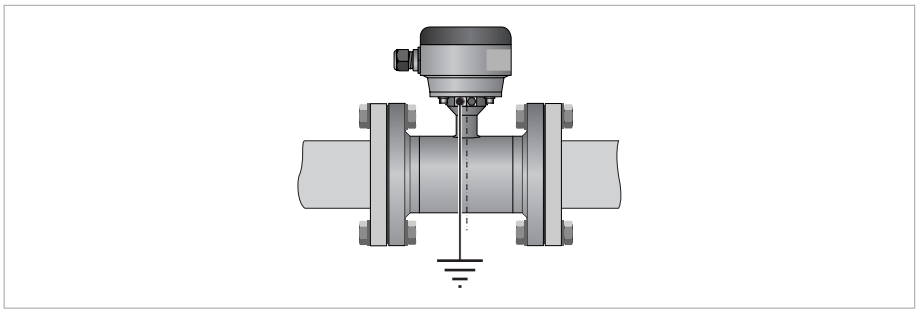

Figure 4-3: Virtual reference

Minimum requirements:

- Size: ≥ DN10 / 3/8"
- Electrical conductivity: ≥ 200 µS/cm
- Signal cable: max. 50 m / 164 ft, type DS

4.4 Connection diagrams

For the connection diagrams please refer to the documentation of the applicable signal converter.

Model	Description, check www.BuyAutomation.com for availability
	Foxboro® Model 9700A Magnetic Flow Sensor
	Nominal diameter and liner
973EA	DN10,3/8" PTFE Flanges 1/2"
97HAA	DN15,1/2" PTFE
973QA	DN20,3/4" PTFE
9701A	DN25,1" PFA
971QA	DN32,1¼" PFA
971HA	DN40,1½" PFA
9702A	DN50,2" PFA
972HA	DN65,2½" PFA
9703A	DN80,3" PFA
9704A	DN100,4" PFA
9705A	DN125,5" PFA
9706A	DN150,6" PFA
9708A	DN200,8" PFA
9710A	DN250,10" ETFE
9712A	DN300,12" ETFE
9714A	DN350,14" ETFE
9716A	DN400,16" ETFE
9718A	DN450,18" ETFE
9720A	DN500,20" ETFE
9724A	DN600,24" ETFE
9728A	DN700,28" ETFE
9732A	DN800,32" ETFE
9736A	DN900,36" ETFE
9740A	DN1000,40" ETFE
9748A	DN1200,48" ETFE
9756A	DN1400,56" ETFE
9764A	DN1600,64" ETFE
9772A	DN1800,72" ETFE
9780A	DN2000,80" ETFE
	Nominal pressure
-1	PN 6 EN 1092-1 (DN1200...2000)
-2	PN 10 EN 1092-1 (DN200...1000)
-3	PN 16 EN 1092-1 (DN65, DN100…1000)
-4	PN 25 EN 1092-1 (DN200 …600)
-5	PN 40 EN 1092-1 (DN10...600)
-A	150 lbs RF ASME B 16.5 (1"…24")
-B	300 lbs RF ASME B 16.5 (1"…24")
-M	JIS 20 K (DN25…40 | 1"…1 1/2") & (DN200 … 600 | 8"…24")
-N	JIS 10 K (DN50…1400 | 2"…56")
	Approval ①
0	non Ex
1	Ex zone 1
3	Ex zone 2 (for IMT33A compact and field only). Only with converter model C, D
5	FM Class I DIV 2 (for IMT33A compact and field, IMT31A compact and wall only)
A	cCSAus OL (for IMT33A compact and field, IMT31A compact and wall only). Only with
C	converter model 3, 4, C, D
D	NEPSI zone 1 (for IMT33A compact and field only). Only with converter model C, D
F	IECEx zone 1 (for IMT33A compact and field, DN700...1200 | 28"…48")
T	BE-Ex EAC (Belarus; for IMT33A compact and field, IMT31A compact and wall only)
U	RU-Ex EAC (Russia; for IMT33A compact and field, IMT31A compact and wall only)
V	KA-Ex EAC (Kazakhstan; for IMT33A compact and field, IMT31A compact and wall only)
W	RU-EAC (Russia)
X	KA-EAC (Kazakhstan)
Y	BE-EAC (Belarus)

Model	Description
	Check BuyAutomation for available :
	System design - Cable connection
1	Compact/Integral design with aluminum converter housing / at the transmitter
2	Compact/Integral design with stainless steel converter housing / at the transmitter
4	Separate with aluminum connection box / ½" NPT
5	Separate with aluminum connection box / PF ½
6	Separate with aluminum connection box / M20 x 1.5 A
A	Separate with stainless steel connection box / ½" NPT
B	Separate with stainless steel connection box / PF ½
C	Separate with stainless steel connection box / M20 x 1.5
	Converter model
0	without - With system Design: 4, 5, 6, A, B, C
3	IMT31A (compact/integral design)
4	IMT31A (wall mount version)
C	IMT33A (compact/integral design)
D	IMT33A (field mount version)
E	IMT33A (wall mount version)
F	IMT33A (rack mount version)
K	IMT30A (compact/integral design)
L	IMT30A (wall mount version
	Lining
0	Standard
1	PTFE
2	PTFE - provided for protection rings (multiple sizes and rings)
S	PFA - provided for protection rings (multiple sizes and rings)
5	Hardrubber (EX only)
D	PU - Polyurethane
	Electrodes
1	Stainless steel DIN 1.4571|316 Ti
2	Stainless steel DIN 1.4401|316
3	Hastelloy C4
4	Hastelloy B
5	Tantalum
6	Titanium
7	Platinum
B	Hastelloy C22
N	Low Noise (aluminum oxide) - Base HC22
U	Low Noise (aluminum oxide) - Base Din 1.4571|316 Ti
	Construction of electrodes
1	fixed
	Housing- / flange material
1	Steel /steel St 37-c22/A105
3	Steel / stainless steel DIN 1.4404|316 L
4	Steel stainless steel dIN 1.4571|316Ti
A	1.4301|304 / steel St 37-c22|A 105 (with stainless steel connection box)
C	1.4301|304 / stainless steel DIN 1.4404|316L (with stainless steel connection box)
D	1.4301|304 / stainless steel DIN 1.4571|316 Ti (with stainless steel connection box)
	Protection class / dimension (face-to-face)
0	IP 66 / 67 / standard
1	IP 68 Field / standard (with stainless steel connection box)
2	IP 68 Factory / standard (with stainless steel connection box)
3	IP 66 / 67 / ISO 13359
4	IP 68 Field / ISO 13359 (with stainless steel connection box)
5	IP 68 Factory / ISO 13359 (with stainless steel connection box)
	Cable
0	Compact - without / separate DS
1	Separate BTS
2	Separate LIYCY (only for FM / CSA Class 1 DIV 2)
Y	Without

Model	Description
	Cable length
0	Compact - none / separate - 5 m | 15 ft
1	10 m | 30 ft
2	15 m | 45 ft
3	20 m | 60 ft
4	25 m | 75 ft
5	30 m | 90 ft
6	40 m | 120 ft
7	50 m | 150 ft
8	100 m | 300 ft
Y	Without
	Calibration
0	Standard
2	316/1.4401 tag plate (120 x 46 mm)
3	316/1.4401 tag plate (67 x 25 mm)
	Grounding ring / Materials
0	Without
4	Ring #1 - Tantalum
5	Ring #1 - Titanium
6	Ring #1 - 1.4404|316 L
7	Ring #1 - Hastelloy C22
E	Ring #3 - 1.4404|316 L
N	Protection ring #2 | Titanium
P	Protection ring #2 | 1.4404|316 L
R	Protection ring #2 | Hastelloy C22
	Finish
0	Standard
	Version
H	Standard
	Construction requirements
0	Standard
	QA / QC requirements
0	Standard
	Special
0	Standard
	Ratio of CT-calibration
0	Standard, R = 80
	Instruction language
0	Standard
	Warranty
0	Standard

① Note: to maintain certification, make sure the transmitter being used is listed in the description

Contact Global Customer Support for the following sizes: 9748A, 9756A, 9764A, 9772A or 9780A with housing and flange material 3 or C

ORDERING INSTRUCTIONS

1. Model Number.
2. Flow Data:
   a. Maximum, minimum, and normal flow rate.
   b. Fluid composition and viscosity at operating temperatures.
   c. Fluid density or relative density (specific gravity).
   d. Maximum, minimum and normal operating temperatures.
   e. Maximum, minimum and normal operating pressures.
   f. Mating pipe schedule.
   g. Type and location (distance) of upstream disturbance.
3. Calibration Information (analog output only); maximum flow rate 20 mA output.
4. Electric Classification.
5. Optional Selections and Accessories.
6. Customer Tag Data.

FLOWEXPERTPRO SIZING APPLICATION

Mobile application FlowExpertPro.com

OTHER FOXBORO PRODUCTS

The Foxboro product lines offer a broad range of measurement and instrument products, including solutions for pressure, flow, analytical, temperature, positioning, controlling and recording.
For a list of these offerings, visit our website at:
www.schneider-electric.com

Schneider Electric Systems USA, Inc.
38 Neponset Avenue
Foxboro, MA 02035
United States of America
http://www.schneider-electric.com

Global Customer Support
Inside U.S.: 1-866-746-6477
Outside U.S.: 1-508-549-2424
https://pasupport.schneider-electric.com

Life Is On

Foxboro®
by Schneider Electric

OCTOBER 2017